Contents

1 Subject of specification 2
2 Range of validity 2
2.1 Deviations 2
2.2 Exclusions 2
3 Hierarchy of documents 2
4 Description 2
4.1 General requirements 2
4.2 Technical documentation 4
4.3 Loads acting on steel structures 4
4.4 Combinations of loads 6
4.5 Materials 6
4.6 Basic criteria for steel structures realization 6
5 Related documents 7
6 Any “Technical Specification” issued by GRUPA LOTOS S.A. listed in Contract Files.Standards and regulations 7
7 Record of changes 9

This document is the property of Grupa LOTOS SA.. Coping and giving it to other are forbidden without express written authority by LOTOS Group S.A.

1 Subject of specification

This specification used in conjunction with other technical specifications of LOTOS Group S.A., establishes minimal requirements regarding designing and execution of steel structures.

2 Range of validity

This specification shall be used when preparing both quotations and Purchase Orders concerning planned LOTOS Group S.A. new investments and modernizations.

It shall also be a base for preparation of other detailed specifications and quotations relevant for package units or other equipment deliveries.

2.1 Deviations

Any deviation from this specification and the relevant specifications, standards and related documents including proposals, which the bidder claims to be economically and / or technically superior solutions must be submitted in writing for review and approval by Grupa LOTOS SA. Non-approved exceptions are not acceptable by Grupa LOTOS S.A.

The supplier must report in writing any ambiguity in this or any other specifications of Grupa LOTOS SA or non-compliance with the referred documents / standards and obtain a written explanation from Grupa LOTOS SA.

2.2 Exclusions

This specification does not include steel transportation structures (bridges, viaducts), as well as chimney stacks, which have been covered in separate study.

3 Hierarchy of documents

In case of conflicts existing between this specification and other documents, the following order of precedence shall govern:

- The current Polish legislation
- Terms of purchase order / contract and other requirements agreed in writing with GLSA
- Data Sheets approved by GLSA
- This specification
- Other Specifications
- Drawings and other documents
- Standards

4 Description

4.1 General requirements

Technical documentation of steel structures shall be prepared according to valid regulations and standards (which are listed in further part of this specification).

Execution of steel structures can be led after building permission (if such is required) is granted, basing on technical documentation and construction organization project.

Completed stages of works (fabrication, delivery, assembly, protections) require technical acceptance concluded with report of acceptance.

Introducing of substantial changes in course of construction requires prior approval of project author, Orderer, as well as including them in as-built documentation.

4.2 Technical documentation

- according to Specification No. 5100

As-built documentation:

As-built documentation includes the full set of assembly and workshop drawings, with plotted in changes that have been introduced during manufacturing and assembling of steel structures.

4.3 Loads acting on steel structures

- according to Specification No. 5100
- Pipelines' loads

The pipelines transfer vertical loads on supporting structures (resulting from deadweight, insulation, filling) as well as horizontal loads (friction, wind).

Minimum values of characteristic vertical loads (acting on area occupied by pipelines on trestle bridge), should be assumed in static analysis according to following recommendations:

Type of trestle bridge	Value of load
light	1,0 kN/^{m2}
medium	1,5 kN/m^2
heavy	2,0 kN/m^2

Type of trestle bridge depends on diameters and spacing intensity of pipelines.

Fixed points of pipelines transfer horizontal loads on supporting structures (usually contained in stress analyses of piping).

Fixed points on routes of supports and trestle bridges should be grouped in places enabling transfer of loads on foundations through latticework system.

Minimum values of horizontal forces acting on fixed points of trestle bridges, should be assumed according to following recommendations:

Recommended schemes of fixed points execution:

- 1-level trestle bridge
- 2-level trestle bridge
- 3-level trestle bridge

Zalecane schematy wykonania punktów stałych:

Estakada 1- poziomowa:

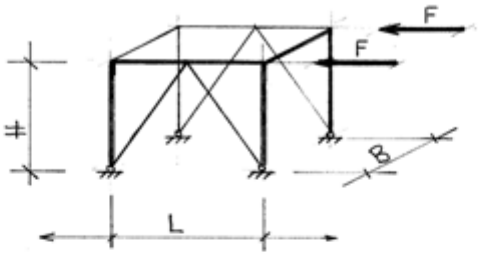

Estakada 2-poziomowa:

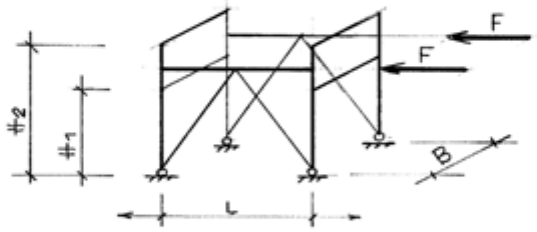

Estakada 3- poziomowa:

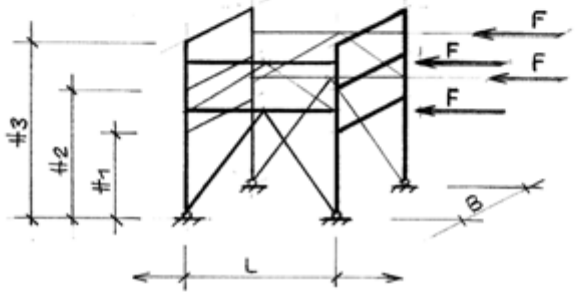

Width of trestle bridge B (m)	≤ 4,00			≤ 6,00			≤ 8,00		
Number of spandrel beams (levels)	1	2	3	1	2	3	1	2	3
The force per fixed point, F (kN)	15,0	30,0	22,5	25,0	50,0	37,5	35	70,0	59,5

- Temperature loads
  In course of steel structures designing temperature influence should be taken into account. Design temperature difference is equal to ± 30°C in relation to temperature of structure assembly t_o = +10°C.
  If temperature of specific structure exceeds 70°C, then analytical strength of material should be reduced.

Climate temperature influence can be omitted if length of object or expansion joints spacing will not exceed 120 m.

4.4 Combinations of loads

- according to Specification No. 5100

4.5 Materials

Classes of construction materials (such as structural steel, grout layers, connectors) which are recommended for steel structures should be adjusted to occurring loads, as well as conditions of work of the structure and its elements in accordance with applicable standards.

4.6 Basic criteria for steel structures realization

- In course of steel structures designing one should aim at minimizing of assembly welding processes on site.
  Elements of steel structures should be fabricated in workshop, and then, after inspection, acceptance and anti-corrosion protection completion, handed over for assembly.
- Structures over roads and rail tracks must ensure maintaining of adequate clearance gauges, namely:
  - clearance gauge over roads should be at least 5,50 m,
  - clearance from ground level to trestle bridge bottom: 3,50 m
- Steel structures foreseen for fireproof protection according to Specification 1181, should be designed in a way that enables 4-side protection of elements.
- Galvanised platform grates should be used for coverings of handling platforms, ceilings of supporting structures (racks) and steel stairs in staircases
- In places of pipe passages through coverings of ceilings, the grates should be prefabricated in such way, which enables their disassembly.
- Orders that are obligatory in steel structures designing:

  Minimum passage headroom :1.90 m

  The dimensions of stairs, ladders and their elements shall be designed in accordance with Minister of Infrastructure order of April 12th 2002 concerning technical conditions to which buildings and their situating shall conform. In case of necessity of providing constant access to machines, the elements of access pathway shall be designed in accordance with standard PN-EN ISO 14122-4, PN-EN ISO 14122-3, PN-EN ISO 14122-2.

  The elements protecting against falling from ladder should be used starting from height of 2.50 ÷ 3.00 m over floor level.

  Protective rings (hoops) should be placed approx. every 0.80 m, while vertical rods with spacing not exceeding 0.30 m.

  The maximum distance between the protection ring and the ladder shall have the maximum allowable value according to the rules, which is 0,8 m.

  The clamping of the spokes should be performed according to the scheme:

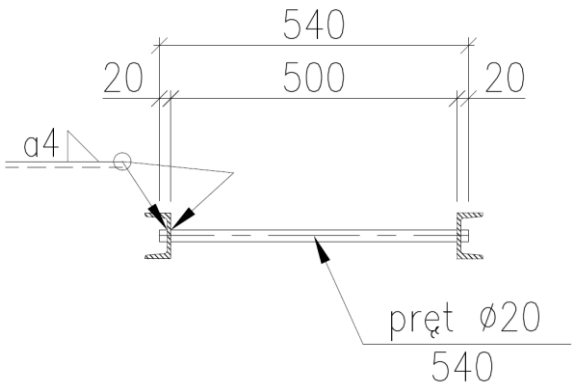

Staircase landings with railing should be placed each 8.0 ÷ 10.0 m, on height of ladder.

Height of railing : 1,10 m

The railings must have kerbs of 0.15 m in height, and cross-bar (between hand-rail and the kerb).

5 Related documents

6 Any "Technical Specification" issued by GRUPA LOTOS S.A. listed in Contract Files.Standards and regulations

List of relevant standards, valid in course of designing and execution of building structures:

- Standards regarding loading of buildings:

PN-EN 1991-1-1:2004	Eurocode 1: Actions on structures – Part 1-1: General actions – Densities, self-weight and imposed loads
PN-EN 1991-1-3:2005	Eurocode 1: Actions on structures – Part 1-3: General actions – Snow loads
PN-EN 1991-1-4:2008	Eurocode 1: Actions on structures – Part 1-4: General actions – Wind actions
PN-EN 1991-1-5:2005	Eurocode 1: Actions on structures – Part 1-5: General actions – Thermal actions
PN-EN 1991-1-7:2008	Eurocode 1: Actions on structures – Part 1-7: General actions – Accidental actions
PN-EN 1991-3:2009	Oddziaływania na konstrukcje - oddziaływania wywołane dzwignicami i maszynami
PN-EN 1991-4:2008	Oddziaływania na konstrukcje - silosy i zbiorniki
PN-EN ISO 14122-4	Fixed ladders
PN-EN ISO 14122-3	Stairs, stepladders and guard-rails
PN-EN ISO 14122-2	Working platforms and walkways

- Standards regarding designing and execution of structures

PN-EN 1993-1-1:2006	Eurocode 3: Design of steel structures – Part 1-1: General rules and rules for buildings

PN-EN 1993-1-3:2008		Eurocode 3: Design of steel structures – Part 1-3: General – Cold formed thin gauge members and sheeting
PN-EN 1993-1-5:2008		Eurocode 3: Design of steel structures – Part 1-5: General – Strength and stability of planar plated structures without transverse loading
PN-EN 1993-1-8:2006		Eurocode 3: Design of steel structures – Part 1-8: General – Design of joints
PN-EN 1993-1-9:2007		Eurocode 3: Design of steel structures – Part 1-9: General – Fatigue strength
PN-EN 1993-3-1:2008		Eurocode 3: Design of steel structures – Part 3-1 Towers, masts and chimneys – Towers and masts
PN-EN 1993-4-1:2009		Eurocode 3: Design of steel structures – Part 4-1: Silos, tanks and pipelines – Silos
PN-EN 1993-5:2009		Eurocode 3: Design of steel structures – Part 5: Piling
PN-EN 1993-6:2009		Eurocode 3: Design of steel structures – Part 6: Crane supporting structures
PN-EN 10025	-	Hot rolled products made of not-alloy constructional steels
PN-EN 288-1	-	Requirements regarding welding technology
PN-EN-ISO 4016	-	Bolts
PN-EN-ISO 4034	-	Nuts
PN-EN-ISO 7091	-	Washers

7 Record of changes

Item	Date	Description of change	Introduced by
0		This specification replaces in whole the previous standard of LOTOS Group S.A. N^{o} PR 07 512 of the same title.	Miłosz Puzio
1	17-11-2006	Change in item 3.5	Miłosz Puzio
2	27-11-2009	Change in item 4 – actualization of the nomenclature and legal status.	Miłosz Puzio
3	30-11-2013 (rev. 3)	Review, update, standardize and changes to the Standard within scope of order No. OK/990/2012	Editorial board coordinated by T.Wróbel
-	31-08-2015	Page layout corrections, no contents changes.	T. Wróbel